Steps for Installing a Crystal Chandelier

1. Preparation

- Tools Needed: Drill, screwdriver, pliers, electrical tape, ladder, etc.
- Check the Components: Ensure all parts are complete (chandelier base, crystal parts, screws, bulbs, etc.).
- Turn Off Power: Always turn off the electricity at the circuit breaker before starting.

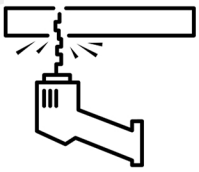

2. Install the Mounting Base

- Determine the Location: Mark the mounting points on the ceiling based on the chandelier's size.
- Secure the Mounting Plate:
- For heavier chandeliers, use expansion screws or hooks for added support.
- Drill holes in the ceiling and securely fix the mounting plate.
- Connect the Wires:
- Connect the chandelier wires to the ceiling's power wires (live wire [L], neutral wire [N], and ground wire [E]).
- Use electrical tape to wrap the connections securely.

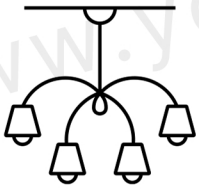

3. Attach the Chandelier Body

- Hang the Chandelier Body: Attach the chandelier body to the mounting plate or hook, ensuring it is secure.
- Adjust Balance: Ensure the chandelier hangs straight and does not tilt.

4. Install Crystal Components

- Install Light Bulbs:
- Insert the bulbs according to the instructions, ensuring they don't exceed the wattage limit.
- Hang Crystal Pendants:
- Refer to the instruction manual to hang the crystals in the correct order.
- Wear gloves to avoid fingerprints or smudges on the crystals.
- Check Stability: Ensure all crystals are securely attached to prevent them from falling.

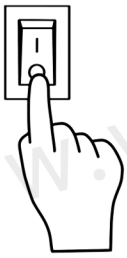

5. Test the Chandelier

- Turn on the Power: Restore the electricity and check if the chandelier lights up properly.
- Adjust Lighting: If the chandelier supports dimming, test the dimming functionality.

YOOGEE LIGHTING

Installation Guide

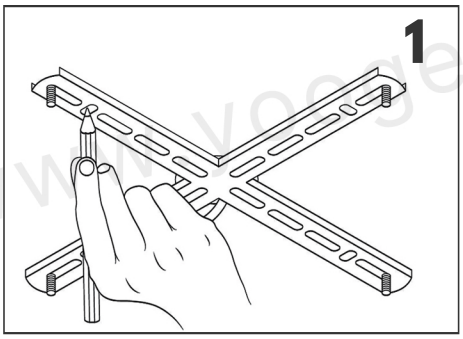

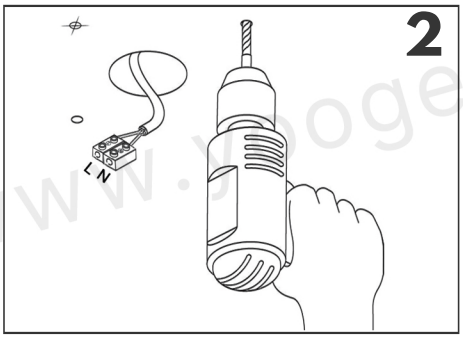

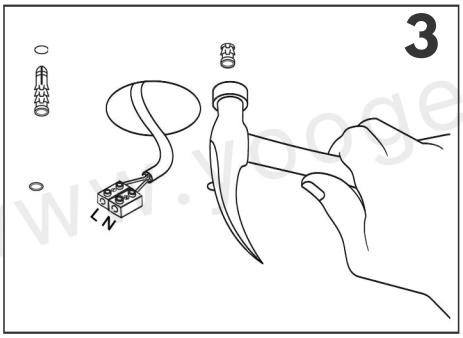

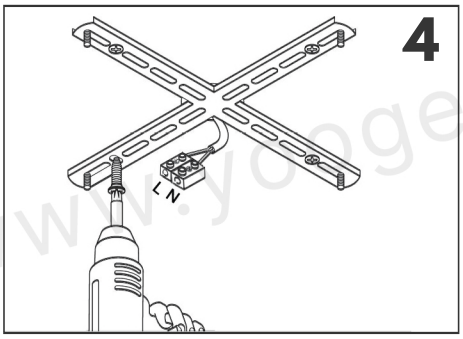

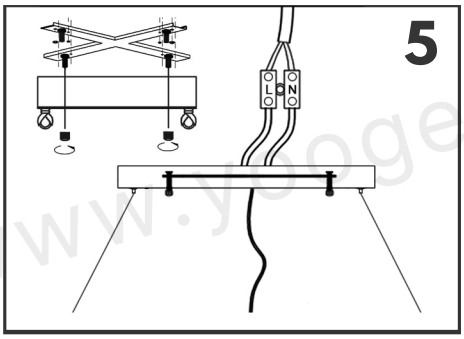

PLEASE NOTE:

Please keep the electricity powered off during the installation process!

1. Fix the mounting bracket to the ceiling
2. Install the LED Bulbs and test whether the circuit is unobstructed
3. Please install the glass according to the picture below

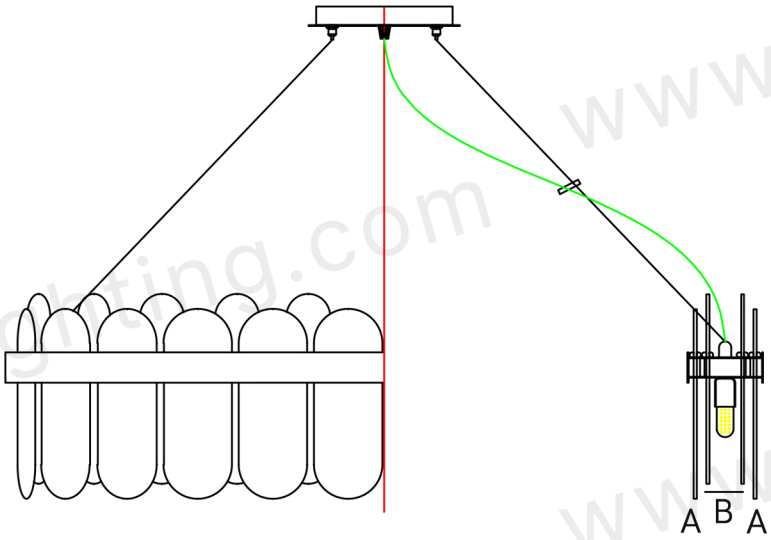

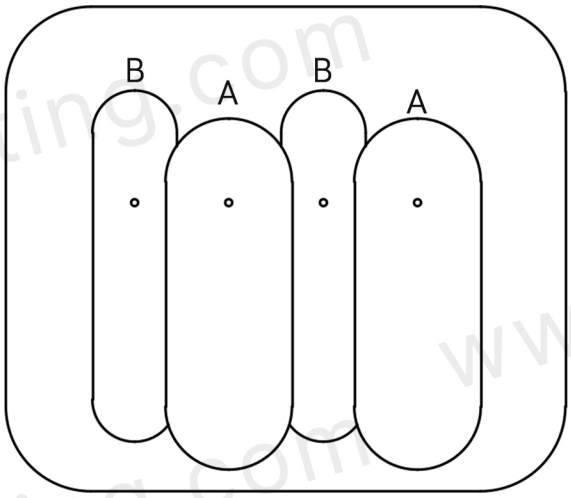

A: 3.5''*9.8''# 41Pcs

B: 2.4''*9.8''# 41Pcs

If you have any questions, please feel free contact to us, THANK YOU!

www.yoogee-lighting.com sales@yoogee-lighting.com